

Kit Contents

Description	Part No	Pcs
Top cap assembly		2
Spring 7.5 N/mm	68040-75	1
Spring 8.5 N/mm	68040-85	1
Spring 9.5 N/mm	68040-95	1
Sleeve 24/38-22	61123-24	1
Sleeve 24/38-33	61123-25	1
Sticker Öhlins	00192-01	2
Sticker Öhlins	01185-04	2
Sticker Öhlins	01185-01	2

⚠Warning!

Öhlins cannot be held responsible for any personal injury or damage that may occur after installing the Öhlins spring kit. We strongly recommend to let an Öhlins authorized service center install this kit.

⚠Warning!

After you have installed this product, taken a test ride at low speed to make sure that you vehicle has maintained stability.

Note!

Please note that this image is a general representation of the product and may differ slightly from your product.

Note!

Please note that during storage and transportation, especially at high ambient temperature, some of the oil and grease used for assembling may leak and stain the packaging. This is in no way detrimental to the product, wipe off the excessive oil/grease with a cloth.

Note!

Before installing this product, check the contents of the kit. If anything is missing, please contact an Öhlins dealer.

Fork Spring Kit for Honda CRF300L / CRF300Rally

FSK 167

Mounting Instructions

ÖHLINS
ADVANCED SUSPENSION TECHNOLOGY

Original Front Fork assembly

LEFT FORK LEG

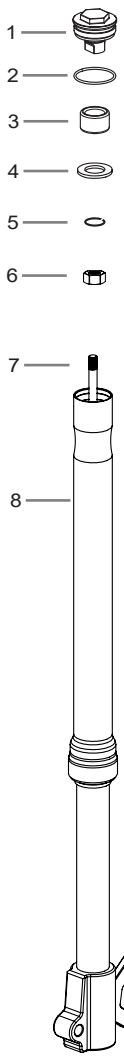

RIGHT FORK LEG

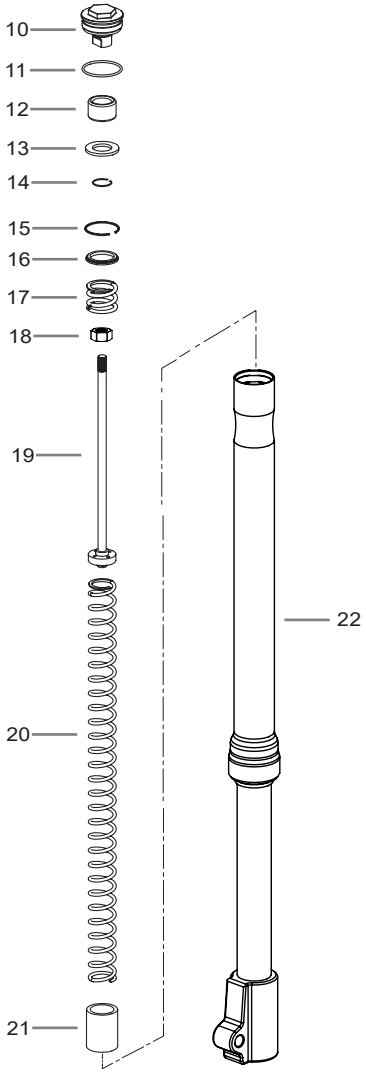

Öhlins Front Fork kit assembly

LEFT FORK LEG

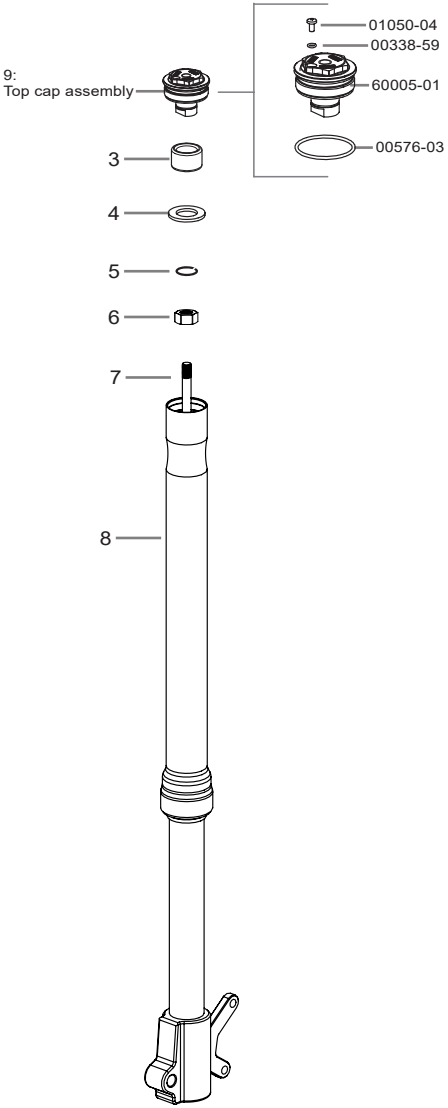

RIGHT FORK LEG

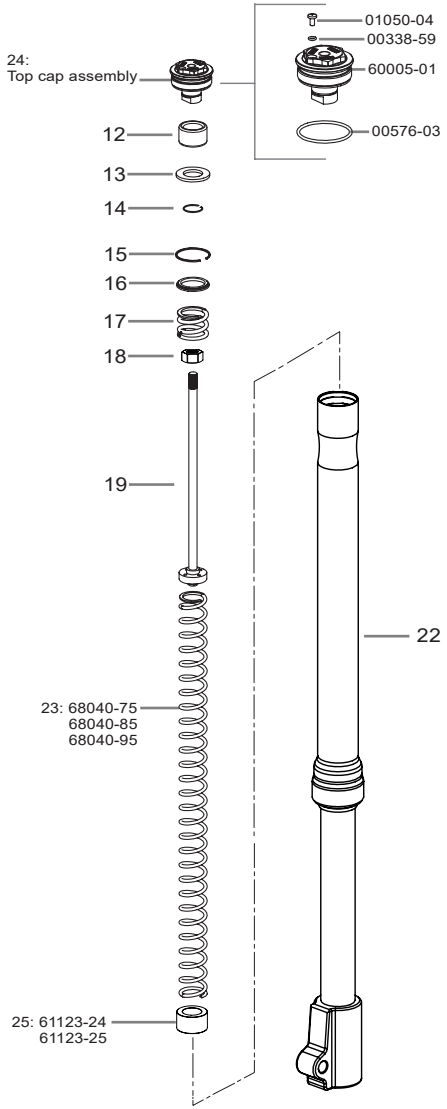

MOUNTING INSTRUCTIONS

Congratulations!

With this purchase you have made a clear statement. This high performance Front Fork kit from Öhlins is nothing but pure racing breed which means that you have taken one more step to eliminate luck on your motorcycle.

The balance between your Front Fork and rear suspension will sharpen up and the performance of your Front Folk will improve. 40 years of racing experience is now a crucial part of your riding experience.

CRF300 L

Recommended oil

We recommended to use Öhlins high performance Front Fork fluid 01314-01

CRF 300 Rally

Recommended oil

For best performance we recommend to use a mix of Öhlins front fork fluid 01314 and 01316 at 1:1 mixing ratio (in a beaker unite 50% of 01314 and 50% of 01316). The final oil viscosity affects how the front fork will behave:

- Higher viscosity mix improves the feeling of control.
- Lower viscosity mix improves the comfort and traction. The oil mixing ratio can be tuned in order to match the rider preferences.

Oil number	01314-01	01316-01
Viscosity cSt @40ºC	40,0	98,0
Oil mixing ratio	1	1

Recommended oil volume

Model	**Damping Leg**	**Spring Leg**
CRF300 L.....	595 ml	595 ml
CRF300 Rally....	610 ml	555 ml

Relief screw

After using your motorcycle for a certain amount of time, please remove the screw situated on the top cap in order to release the air accumulated inside the Front Fork. Screw No.01050-04 Tightening torque is 3 Nm.

Recommended spring

Feeling	Soft	Medium		Hard
Spring compatible	CRF300L	CRF300L	CRF 300 Rally	CRF300 Rally
Part number	68040-75	68040-85		68040-95
Spring rate (N/mm)	7.5	8.5		9.5

MOUNTING INSTRUCTIONS

How to install

1. Put the motorcycle on a work stand so that the front wheel barely touches the ground. Make sure the motorcycle is in a stable position.

2. Loosen the top triple clamp clamping bolt.

3. Loosen 1/2 turn the front fork top caps(1)

4. Loosen the lower triple clamp bolts and slide the front fork down.

Note!

Work with 1 fork leg at the time.

LEFT FORK LEG

5. Loosen the top cap(1) from the front fork outer tube(8)

6. Loosen the nut(6) and remove the top cap (1)

7. Remove the cir-clip(5), the washer(4) and stop rubber(3)

8. Purge all the oil from the fork leg.

9. Fill the front fork leg with the oil according to the recomended type and quantity.

10. Install the stop rubber(3), the washer(4) and the cir-clip(5) on the top cap (9)

11. Install the top cap (9), rod (7) and nut (6)

12. Install the Öhlins top cap(9) to the front fork outer tube (19)

Tighten:

- Top cap to damper rod at 17 Nm.
- Top cap to outer tube ~10 N/m.

MOUNTING INSTRUCTIONS

RIGHT FORK LEG

13. Loosen the top cap(10) from the front fork outer tube(22)

14. Remove the cir-clip(15), the washer(16) and top out spring(17), rod(19), spring (20) and nylon spacer(21)

15. Loosen the nut(18) and remove the top cap (10)

16. Remove the cir-clip(14), the washer(13) and stop rubber(12)

17. Purge all the oil from the fork leg.

18. Fill the front fork leg with oil according to the recommended type and quantity.

Note!
61123-24 Spacer (25) for CRF300 L
61123-25 Spacer (25) for CRF300 Rally



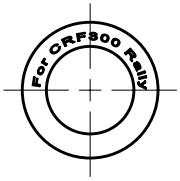

19. Install the spacer(25) [according to the specific model] and Öhlins spring (23).

20. Install the stop rubber(12) ,the washer(13) and the cir-clip(14) on the Öhlins top cap (24)

21. Install the top out spring(17), the washer(16) and the cir-clip(15), the nut (18) and the Öhlins top cap (24) on the rod (19)

22. Install the Öhlins top cap(24) to the front fork outer tube (22)
Tighten:
- Top cap to damper rod at 17 Nm.
- Top cap to outer tube ~10 Nm.

23. Re-install both fork leg as per vehicle services manual instructions.

MOUNTING INSTRUCTIONS

Öhlins products are subject to continuous improvement and development, therefore, although these instructions include the most up-to-date information available at the time of printing, minor updates may occur.

To find the latest information contact an Öhlins distributor. Please contact Öhlins if you have any questions regarding the contents in this document.

Part no. MI_FSK 167_EN_0
Issued 2022-06-01

© Öhlins Asia Co. Ltd. All rights reserved. Any reprinting or unauthorized use without the written permission of Öhlins Racing AB is prohibited.

Öhlins Asia Co. Ltd
700/937 Moo5, Tambol Nongkhaga,
Amphur Phantong, Chonburi Province
20160 Thailand

ÖHLINS
ADVANCED SUSPENSION TECHNOLOGY