

	Kit Contents		
	Description	**Part No**	**Pcs**
1	Shock absorber front	BMV 5U01	2
2	Helper spring		2
3	Spring support	05193-14	2
4	Main spring		2
5	Upper spring seat	06211-01	2
6	Lower top mount spacer	05688-07	2
7	Top mount L/R	05927-20/21	2
8	Upper top mount spacer	05688-06	2
9	Lock nut	00539-01	2
10	Preload adjuster tool	03199-01	1
11	ARB drop link	05928-10	2
12	Öhlins sticker kit	10207-01	1
13	Öhlins Owners manual	07445-01	1

Note!

Please note that there can be small differences between your product and the images in these instructions.

Note!

Please note that during storage and transport, especially at high ambient temperature, some of the oil and grease used for assembly may leak and stain the packaging. This will not cause damage to the product, wipe off the excessive oil or grease with a cloth.

Note!

Please note that this kit is designed for maximum track performance using motorsport components and because of that, there is an increased risk of noise that may be heard inside the vehicle during usage on open roads.

Note!

Before you install this product, check the kit contents. If anything is missing, please contact an Öhlins dealer.

⚠ Warning!

Before you install this product, read the Öhlins Owner's manual. This product is an important part of the vehicle and the vehicle stability.

Note!

When using aftermarket wheels with different widths and offsets, the use of spacers to clear the suspension may be necessary.

Shock absorber set Advanced Track TTX

BMW M3 E46 2001-2005

Mounting Instructions

BMV MU01 Front

ÖHLINS

MOUNTING INSTRUCTIONS

⚠ Warning!

We strongly recommend to let an Öhlins dealer install this product.

⚠ Warning!

If you work with a lifted vehicle, make sure that it is safely supported to prevent it from tipping over.

👁 Note!

When you work with this product, see the vehicle service manual for vehicle specific procedures and important data.

👁 Note!

Before you install this product clean the vehicle.

1

Raise the vehicle and put it on jack stands.

2

Remove the wheels.

3

Loosen the bolt for the lower shock attachments.

👁 Note!

Support the wheel hubs in an appropriate way on each side of the vehicle so that the brake hoses can not be damaged.

4

Loosen the upper attachments. Remove the original shock absorbers from the car.

5

Assemble the front shock absorbers according to figure 1: Install the helper spring (2), the spring support (3), the main spring (4), the upper spring seat (5), the lower top mount spacer (6), the Öhlins top mount (7), the upper top mount spacer (8) and the lock nut (9). Tighten the lock nut to 40 Nm.

👁 Note!

When tightening the top mount nut, the shock absorber shaft end must be held in position with an allen key.

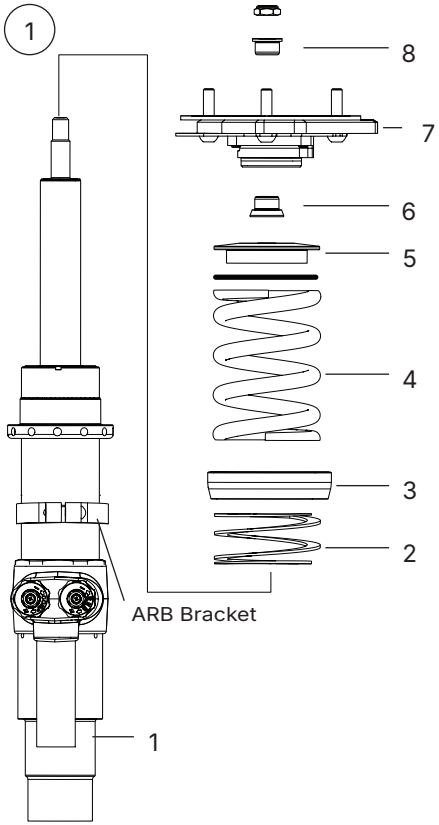

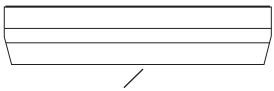

👁 Note!

Please note orientation of the spring support. The smaller diameter should be installed towards the helper spring.

MOUNTING INSTRUCTIONS

6

Fit the shock absorber to the vehicle upright. Position it according to Fig 2 so that the adjusters on the shock absorber is pointing towards the front of the vehicle/direction of travel. Make sure there is clearance between the upright and reservoir according to fig 3.

7

Tighten the lower attachment.

8

Fasten the upper attachment/top mount to the vehicle.

ARB drop links

9

Loosen the nuts holding the uniballs and adjust the length of the drop links according to Fig 4. Adjust both ends evenly. Please note that one end of the drop link is reversed threaded.

10

Loosen the screw on the ARB bracket on the shock absorber and adjust and position it according to fig 5.

2

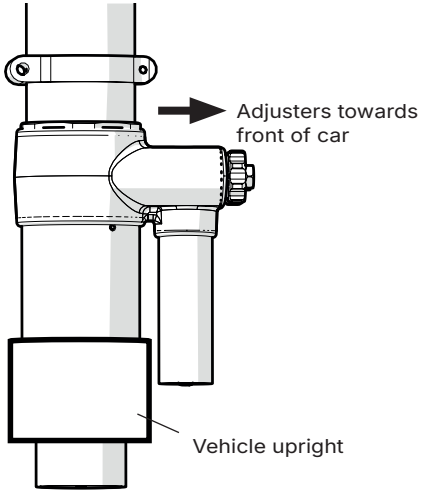

3

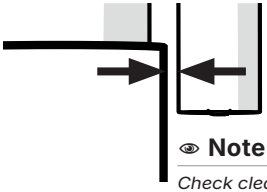

Note!

Check clearance!

4



⚠ Warning!

The adjustment range of the drop link is 255-279 mm. Never adjust it beyond 279 mm.

5

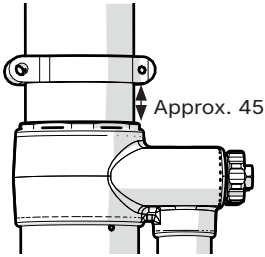

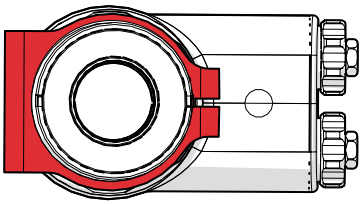

MOUNTING INSTRUCTIONS

11

Fit the drop link to the shock absorber ARB bracket according to Fig 6 with a conical spacer on each side of the uniball. Please note that the drop link screws are in different lengths. The shorter 45 mm screw should be connected to the shock absorber ARB bracket. Tigthen the screw to 40 Nm.

12

Connect the drop link to the anti roll bar of the vehicle according to fig 7. Fit the lock nut and washer and tighten to 40 Nm

Note!

The recommended installation lengths and angles of the ARB drop links are to be considered approximations. Due to the many ways of adjusting lengths of both the ARB drop links, the ARB bracket on the shock absorber and variations on different vehicles, it's hard to specifiy any exact lengths and angles for the installation.

13

Make sure that all removed parts are reinstalled in the same way as they were before the installation of the Öhlins shock absorber.

14

Reinstall the wheel.

Note!

Make sure that all bolts are tightened to the correct torque and that nothing fouls or restricts movement of the strut when it is being fully compressed or extended. Test this over the whole steering range from lock to lock. Pay extra attention to the installed ARB drop link that it clears all parts of the vehicle during lock to lock steering range. If any interference occurs, readjust lengths and angles for the drop link until no interference occurs.

Some of the original bolts need to be replaced when removed. See the service manual for your vehicle or contact an Öhlins dealer.

Note!

Make sure there is enough clearance between the wheel and the suspension according to Fig 8. When using wider wheel options the use of spacers may be necessary.

6

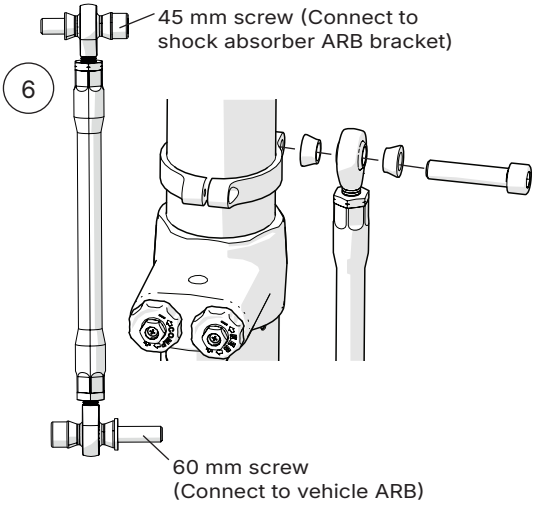

7

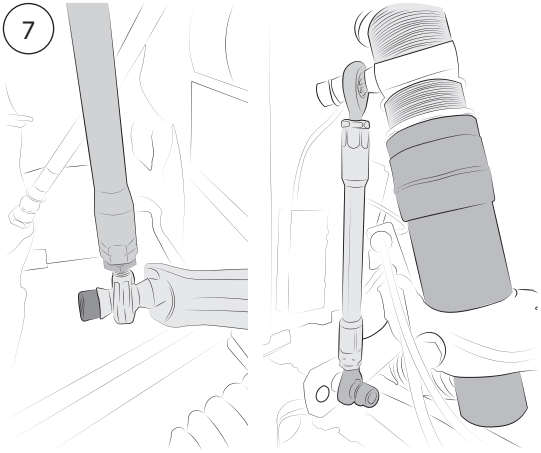

8

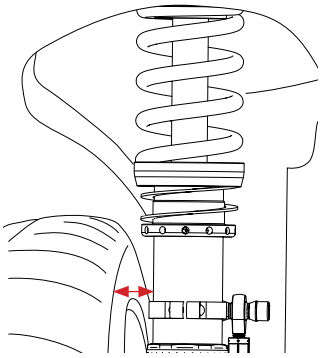

ADJUSTMENTS - TOP MOUNT

1

To adjust camber, loosen the 3x nuts (1) slightly and push/pull the top mount inward/ outward. Adjust until desired amount of camber is achieved and tighten the nuts to 20 Nm.

2

To adjust caster, loosen the 4x allen screws (2) and push the top mount forward or backward. Adjust until the desired amount of caster is achived and tighten the screws to 11 Nm.

Note!

Please note that some of the screws will be inaccessible when maximum camber or caster is adjusted. During a wheel alignment it's recommended to adjust angles in the following order to be able to access all screws:
1. Caster
2. Camber
3. Toe

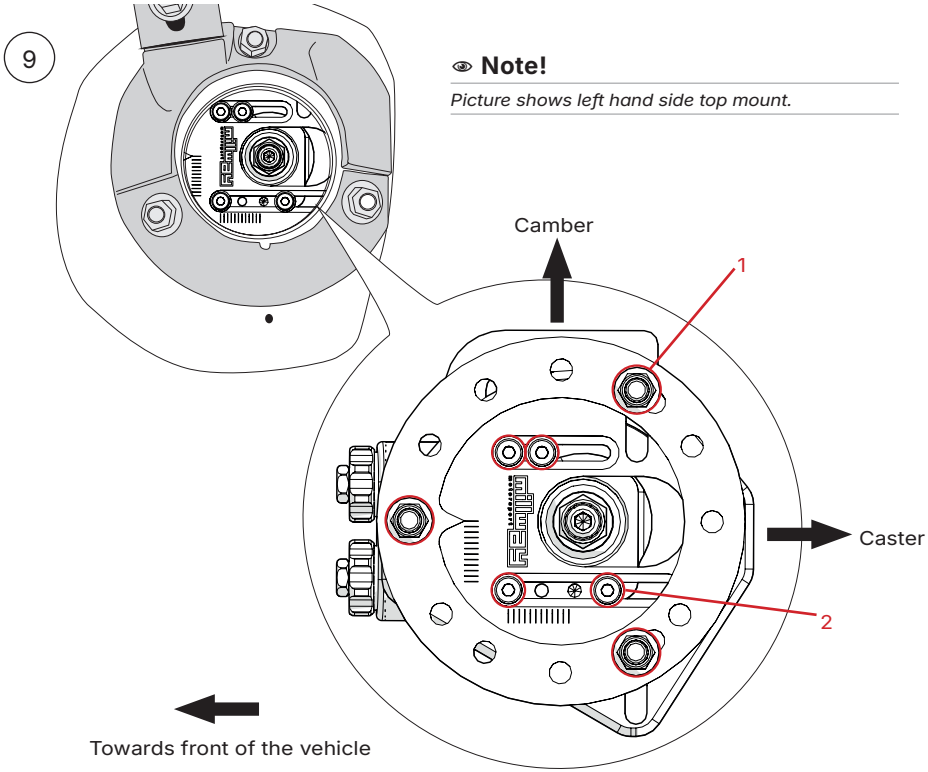

Note!

Picture shows left hand side top mount.

ADJUSTMENTS

⚠ Warning!

Before you ride/drive, always make sure that the setup is according to the recommended setup data. Read about adjustments and setting up in the Öhlins Owner's Manual before you make any adjustments. Contact an Öhlins dealer if you have any questions about setting up.

SETUP DATA

	Street	Track
Compression damping	15 clicks	10 clicks
Rebound damping	15 clicks	10 clicks

Recommeded Springs

Main Spring

Length	Rate	Öhlins#
140 mm	130 N/mm	48140-23

Helper spring

Length	Rate	Öhlins#
73 mm	7.5 N/mm	05173-12

Recommended installed spring package length

182 mm

Measure from upper edge of helper spring to lower part of main spring. Adjust the installed spring package length by turning the spring preload adjuster until desired ride height is achieved.

Depending on car model and equipment, the ride height at the recommended installed spring package length may vary.

⚠ Warning!

Never adjust the spring preload adjuster so that the installed spring package length is shorter than 182 mm. If that is done the spring may coil bind.

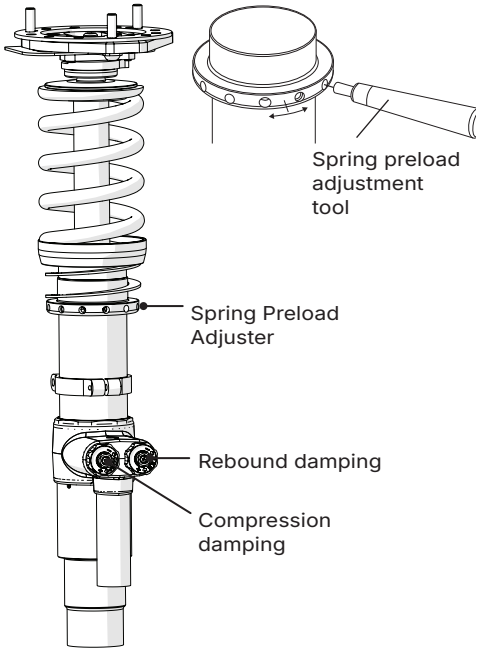

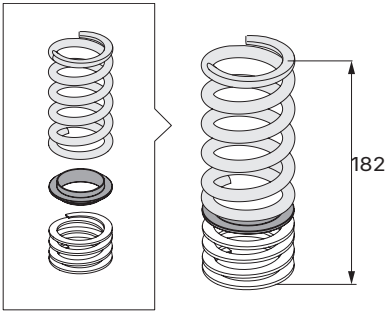

Öhlins products are subject to continuous improvement and development, therefore, although these instructions include the most up-to-date information available at the time of printing, minor updates may occur.

To find the latest information contact an Öhlins distributor. Please contact Öhlins if you have any questions regarding the contents in this document.

Part no. MI_BMV MU01_1
Issued 2026-08-31

© Öhlins Group AB. All rights reserved. Any reprinting or unauthorized use without the written permission of Öhlins Group AB is prohibited.

Öhlins Group AB
Box 722
S-194 27 Upplands Väsby, Sweden
Phone +46 8 590 025 00
fax +46 8 590 025 80



	Kit Contents		
	Description	**Part No**	**Pcs**
1	M8 top mount bolts	05404-14	4
2	Shock absorber rear	BMV 6U00	2
3	Helper spring		2
4	Spring support	05193-07	2
5	Main spring		2
6	Upper spring retainer	05907-05	2
7	Bolt M10×55mm	00439-21	2
8	Washer	00426-08	2
9	Rear top mount	05927-10	2
10	M10 lock nut	00539-04	2

Note!

Please note that there can be small differences between your product and the images in these instructions.

Note!

Please note that during storage and transport, especially at high ambient temperature, some of the oil and grease used for assembly may leak and stain the packaging. This will not cause damage to the product, wipe off the excessive oil or grease with a cloth.

Note!

Please note that this kit is designed for maximum track performance using motorsport components and because of that, there is an increased risk of noise that may be heard inside the vehicle during usage on open roads.

Note!

Before you install this product, check the kit contents. If anything is missing, please contact an Öhlins dealer.

⚠ Warning!

Before you install this product, read the Öhlins Owner's manual. This product is an important part of the vehicle and the vehicle stability.

Note!

Please note that the rear shock absorber is in a coilover configuration. It is highly recommended to reinforce the rear mounting points of the car with a roll cage, x-brace or similar to allow for the increased loads from the spring. Öhlins takes no responsibilty for any possible damage on the car due to the spring loads.

Shock absorber set Advanced Track TTX

BMW M3 E46 2001-2005

Mounting Instructions

BMV MU01 Rear

ÖHLINS

MOUNTING INSTRUCTIONS

⚠ Warning!

We strongly recommend to let an Öhlins dealer install this product.

⚠ Warning!

If you work with a lifted vehicle, make sure that it is safely supported to prevent it from tipping over.

👁 Note!

When you work with this product, see the vehicle service manual for vehicle specific procedures and important data.

👁 Note!

Before you install this product clean the vehicle.

1
Raise the vehicle and put it on jack stands.

2
Remove the wheels.

3
Loosen the bolt for the lower shock attachments.

👁 Note!

Support the wheel hubs in an appropriate way on each side of the vehicle so that the brake hoses can not be damaged.

4
Loosen the upper attachments. Remove the original shock absorbers from the car.

5
Assemble the rear top mounts according to Fig 1. Apply a small amount of Loctite 2701 to the M8 bolts (1) and install in the rear top mount. Tighten the bolts to 15Nm.

6
Assemble the rear shock absorbers according to Fig 2: Install the helper spring (3), the spring support (4), the main spring (5) and the spring retainer (6). Fit the top mount (9) to the shock absorber and install the washer (8), the M10 bolt (7) and the lock nut (10). Tighten the lock nut to 80 Nm.

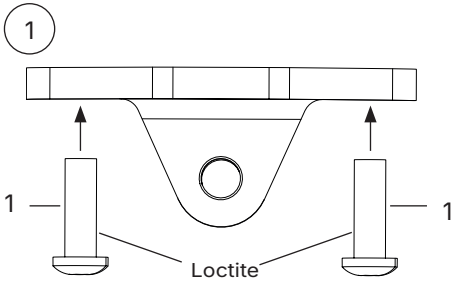

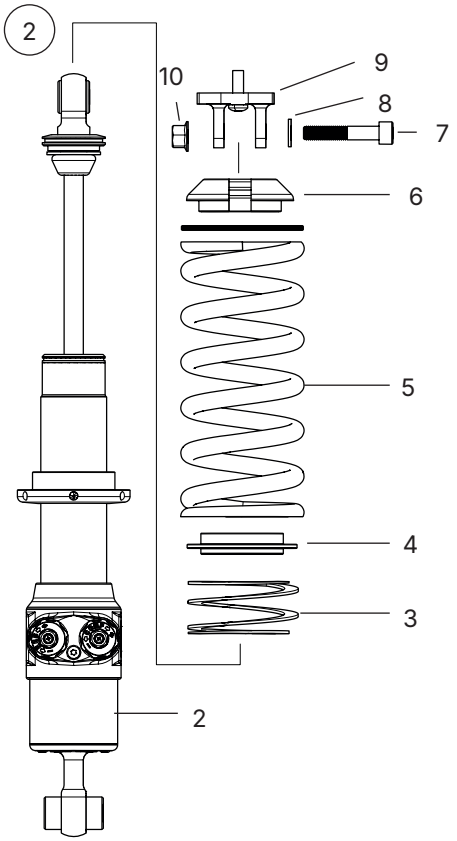

MOUNTING INSTRUCTIONS

7

Install the shock absorber to the vehicle starting with the top mount and upper attachments according to Fig 3.
Please note that the top mounts are asymmetrical to allow for more clearance between the spring and the wheel well of the vehicle.

8

Fasten the lower attachment and position the damper so that the adjusters are facing the rear of the vehicle according to Fig 4.

Note!

Make sure that all bolts are tightened to the correct torque and that nothing fouls or restricts movement of the strut when it is being fully compressed or extended. Some of the original bolts need to be replaced when removed. See the service manual for your vehicle or contact an Öhlins dealer.

9

Make sure that all removed parts are reinstalled in the same way as they were before the installation of the Öhlins shock absorber.

10

Reinstall the wheel.

3

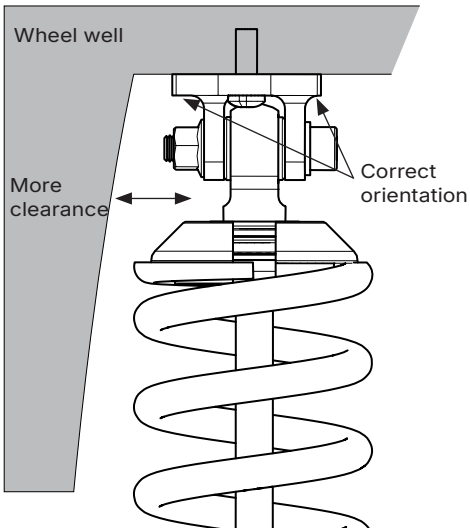

4

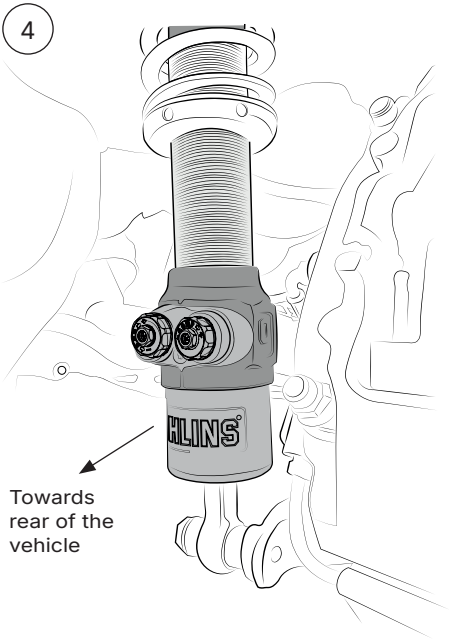

ADJUSTMENTS

⚠ Warning!

Before you ride/drive, always make sure that the setup is according to the recommended setup data. Read about adjustments and setting up in the Öhlins Owner's Manual before you make any adjustments. Contact an Öhlins dealer if you have any questions about setting up.

SETUP DATA

	Street	Track
Compression damping	12 clicks	10 clicks
Rebound damping	15 clicks	10 clicks

Recommeded Springs
Main Spring

Length	Rate	Öhlins#
200 mm	60 N/mm	48200-09

Helper spring

Length	Rate	Öhlins#
73 mm	7.5 N/mm	05173-12

Recommended installed spring package length
252 mm

Measure from upper edge of helper spring to lower part of main spring. Adjust the installed spring package length by turning the spring preload adjuster until desired ride height is achieved.

Depending on car model and equipment, the ride height at the recommended installed spring package length may vary.

⚠ Warning!

Never adjust the spring preload adjuster so that the installed spring package length is shorter than 235 mm. If that is done the spring may coil bind.

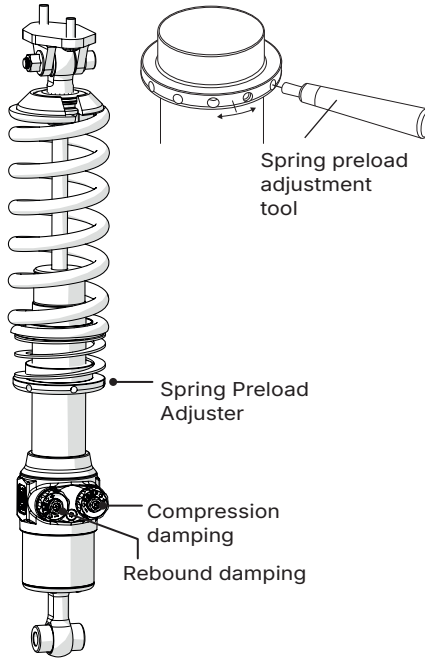

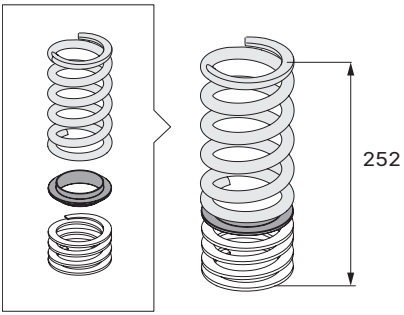

Öhlins products are subject to continuous improvement and development, therefore, although these instructions include the most up-to-date information available at the time of printing, minor updates may occur.

To find the latest information contact an Öhlins distributor. Please contact Öhlins if you have any questions regarding the contents in this document.

Part no. MI_BMV MU01_1
Issued 2026-08-31

© Öhlins Group AB. All rights reserved. Any reprinting or unauthorized use without the written permission of Öhlins Group AB is prohibited.

Öhlins Group AB
Box 722
S-194 27 Upplands Väsby, Sweden
Phone +46 8 590 025 00
fax +46 8 590 025 80